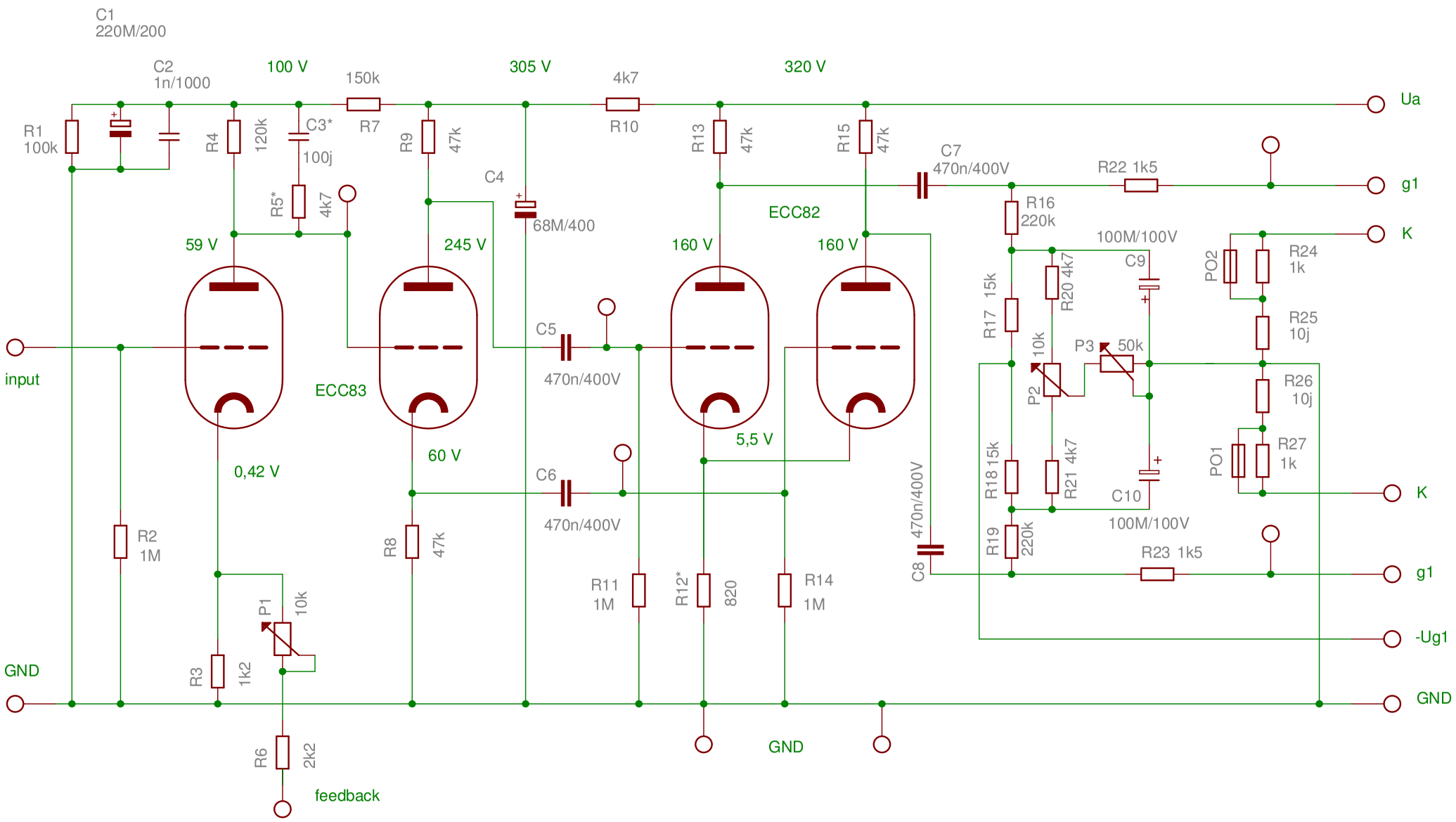
C1
220M/200
C2
1n/1000
100 V
150k
305 V
4k7
320 V
Ua
R1
100k
R4
120k
C3*
100j
R7
R9
47k
R10
R13
47k
R15
47k
C7
470n/400V
R22 1k5
g1
R5*
4k7
C4
68M/400
ECC82
R16
220k
K
59 V
245 V
160 V
160 V
100M/100V
C9
PO2
R24
1k
R17 15k
R20 4k7
R25
10j
C5
P3
50k
input
470n/400V
P2
10k
R26
10j
ECC83
5,5 V
R27
1k
PO1
R18 15k
R21 4k7
0,42 V
60 V
C6
C10
K
470n/400V
470n/400V
R19
220k
100M/100V
R2
1M
R8
47k
C8
R23 1k5
g1
R11
1M
R12*
820
R14
1M
P1
10k
-Ug1
GND
R3
1k2
GND
GND
R6
2k2
feedback